CCL WETROOMS

SECTION 3.2

WET-DEC

PRODUCT
SPECIFICATION
GUIDE

3.2 WET-DEC

FINISHED PRODUCT

The Wet-Dec is a pre-formed shower base developed specifically to allow the installation of a wetroom onto a timber floor.

Available in a range of sizes, the Wet-Dec has a built-in gradient ensuring that water from the shower is directed towards the drain outlet.

The Wet-Dec has a built-in four-way fall which provides a consistent gradient, making it ideal for use with mosaic tiles.

Each Wet-Dec is supplied with our height adjustable shower drain which is available in either a grained or mirrored stainless steel finish.

KEY FEATURES

- Designed for timber floors
- Four-way fall - suited to mosaic tiles
- 9 pre-formed sizes
- Trimmable
- Lifetime Guarantee
- Flow rate up to 27 L/min
- Height adjustable grate
- Flexible drain outlet

BESPOKE

DEC

The Wet-Dec is a manufactured from glass reinforced plastic (GRP) making it easy to install whilst ensuring a consistent four-way gradient every time.

The four-way fall provides a consistent gradient of approximately 17mm to the drain, making it ideal for the installation of mosaic tiles.

The WD4 and WD5 both feature an up-stand as part of their design. This is essentially a raised border on 2 sides of the dec which allows the drain to be positioned as close to the corner as possible while maintaining strength and rigidity.

Its second function is to provide a level edge to tile against.

WET-DEC COMPONENTS

- Designed for timber floors
- Four-way fall - suited to mosaic tiles
- 9 pre-formed sizes
- Can be trimmed by up to 50mm
- Lifetime guarantee
- 22mm Depth

DEC SIZES

The Wet-Dec is available in 9 standard sizes:

A		B
1300mm	x	800mm
1000mm	x	1000mm
1500mm	x	800mm
900mm	x	900mm
800mm	x	800mm
1400mm	x	900mm
1200mm	x	1200mm
1850mm	x	900mm
1700mm	x	1700mm

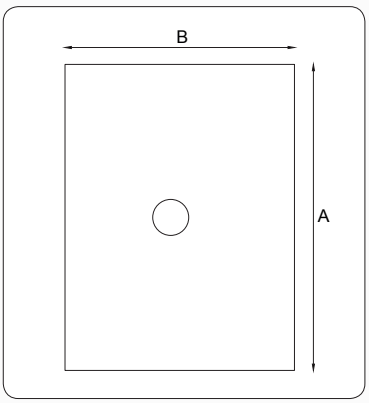

27

WE'RE HERE TO HELP
0844 327 6002

TRAP

The trap has an adjustable ball joint for ease of installation and comes with removable dip-tube.

The trap is located within the base component which comes un-drilled allowing for extra flexibility.

- Multi-directional outlet
- 50mm Water seal
- 50mm Outlet, supplied with 50mm-42mm reducer
- BS1455/1566
- Easy to maintain
- Flow rate up to 27 L/min

TRAP WITH GRATE AND DRAIN

GRATE FINISH

The grate is available in a grained or mirrored finish.

Both are manufactured in 316 marine grade stainless steel, ensuring a stunning high quality finish.

Grate dimensions:
150mm x 150mm

To cope with different tile thicknesses the grate is available in two heights;

7mm - Adjustable between 7mm-12mm
12mm - Adjustable between 12mm-20mm

Type 7G - 7mm Grained:
Grained stainless steel adjustable between 7mm-12mm.

TYPE 7G

Type 12G - 12mm Grained:
Grained stainless steel adjustable between 12mm-20mm.

TYPE 12G

Type 7M - 12mm Mirrored:
Mirrored stainless steel adjustable between 7mm-12mm.

TYPE 7M

Type 12M - 12mm Mirrored:
Mirrored stainless steel adjustable between 12mm-20mm.

TYPE 12M

PRODUCT DETAILS

IMAGE	DESCRIPTION	DEC SIZE	PRODUCT REF
	Wet-Dec, Maximum flow rate 27 L/min.	1300mm x 800mm 1000mm x 1000mm 1500mm x 800mm 900mm x 900mm 800mm x 800mm 1400mm x 900mm 1200mm x 1200mm 1850mm x 900mm 1700mm x 1700mm	WD1 WD2 WD3 WD4 WD5 WD6 WD7 WD8 WD9
	RIW **Tilesafe** – A superior waterproof membrane designed for use in wetrooms, prior to the application of ceramic tiles and natural stone[2]. • Self-adhesive • Quick and easy to install • Lifetime Guarantee • De-coupling properties	5m² 10m²	TSK-5 TSK-10
	RIW FWM – A liquid membrane designed for waterproofing walls, fully compatible with Tilesafe and Screedsafe[2].	8kg	FWM-8

[2] For full technical details please refer to Section 4

WE'RE HERE TO HELP
0844 327 6002

HOW TO SPECIFY

To specify your Wet-Dec, first select the required size of shower area, followed by the grate height and finally the grate finish.

Example: 1500mm x 800mm Wet-Dec with 7mm mirrored grate would be code:
WD3/Type 7M

Membrane
It is essential that the floor is waterproofed or 'tanked' using one of the membranes in the 'product details' on page 12.

For timber floors we would recommend the Tilesafe membrane is applied to the entire wetroom floor.

FWM should then be applied to the walls of the shower area plus an additional 300mm and overlapped onto the Tilesafe Reinforcing Tape.

IN DETAIL

CROSS SECTION SHOWING WET-DEC AND OVERLAPPING FWM

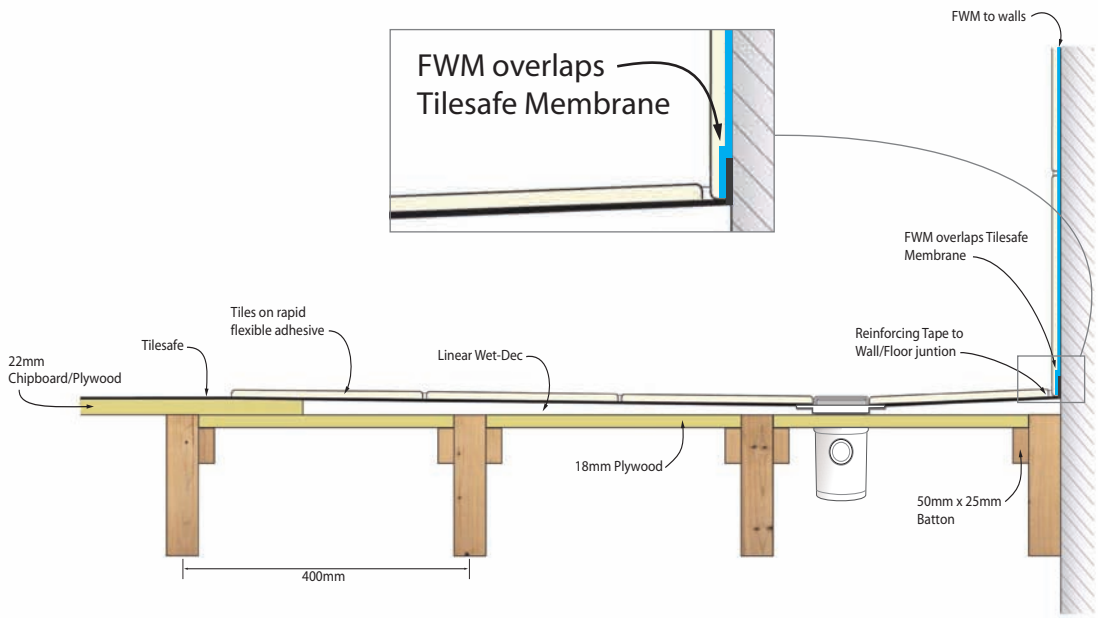

TRAP

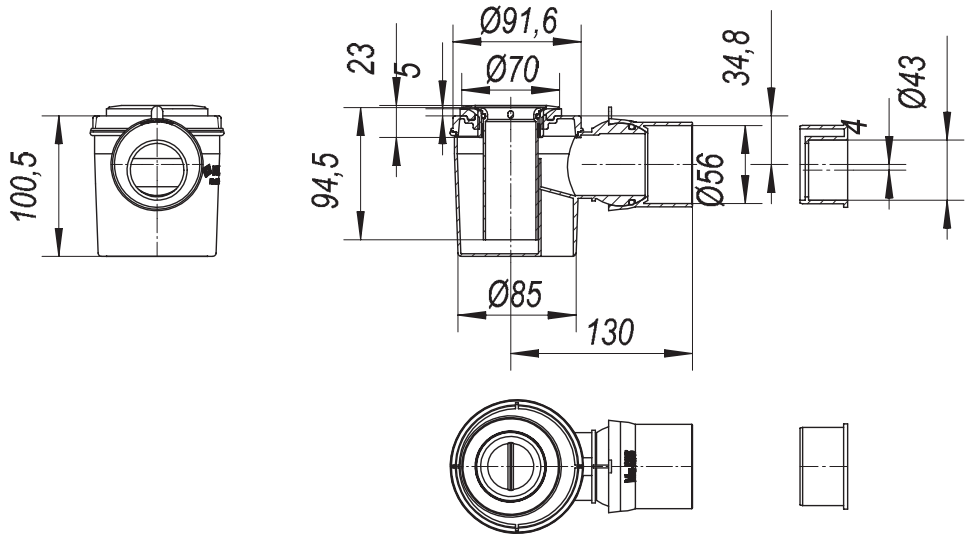

WD1

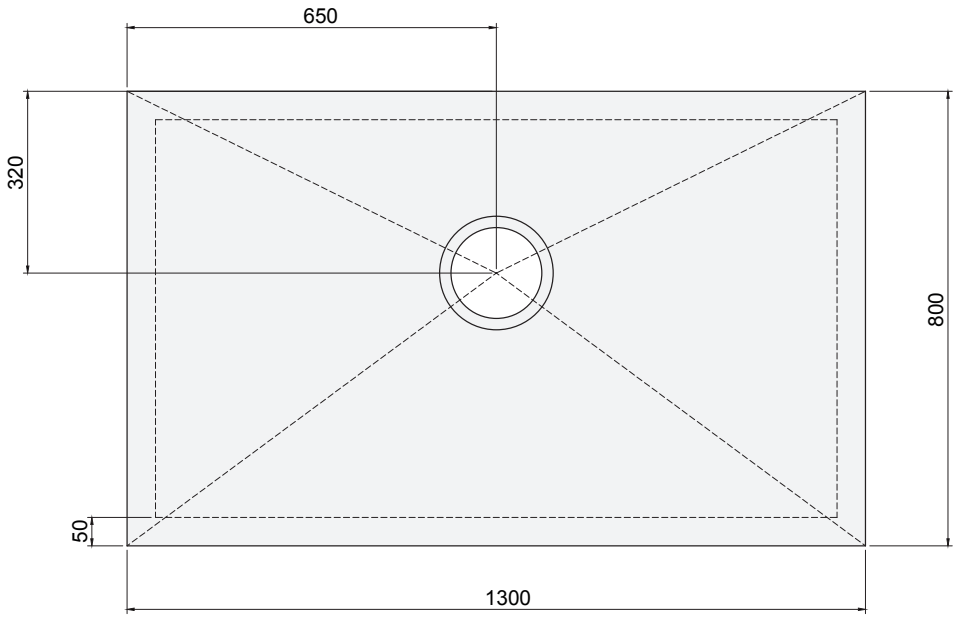

WE'RE HERE TO HELP
☎ 0844 327 6002

WD2

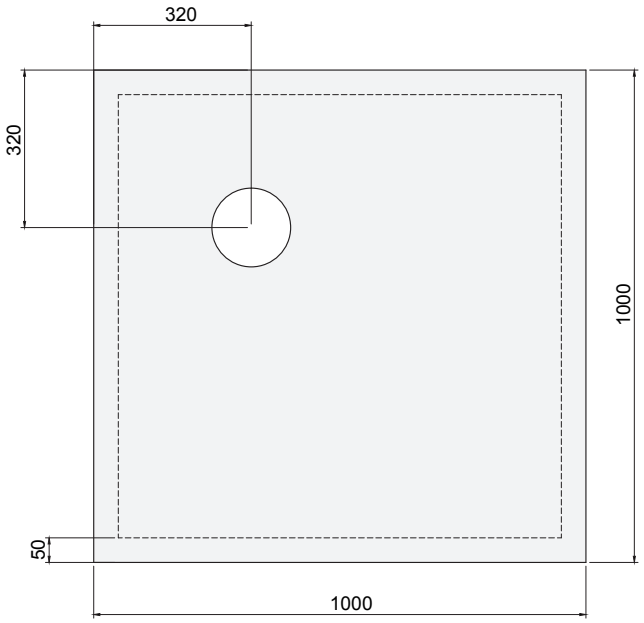

WD3

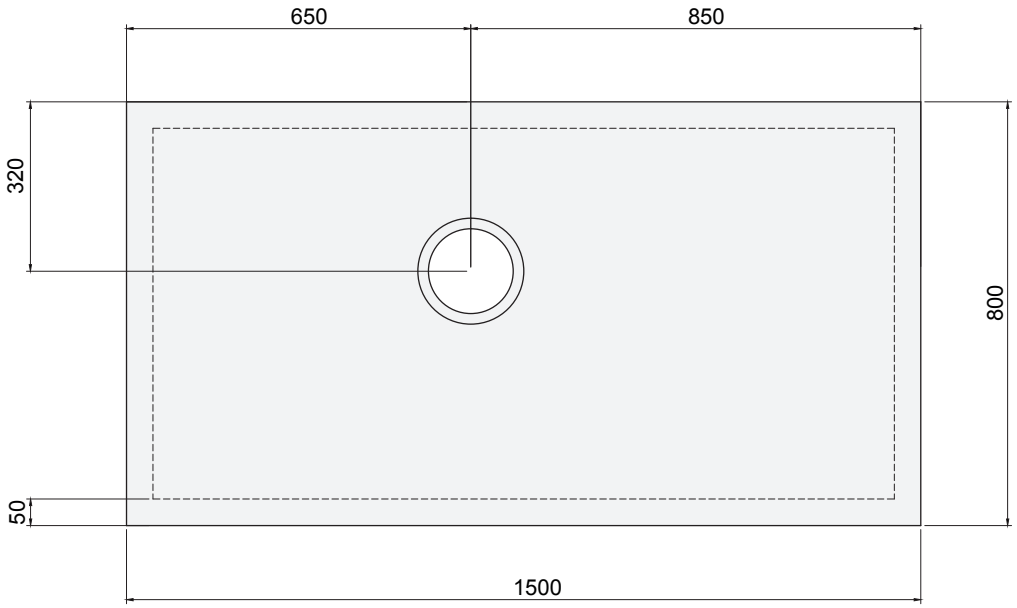

WD4

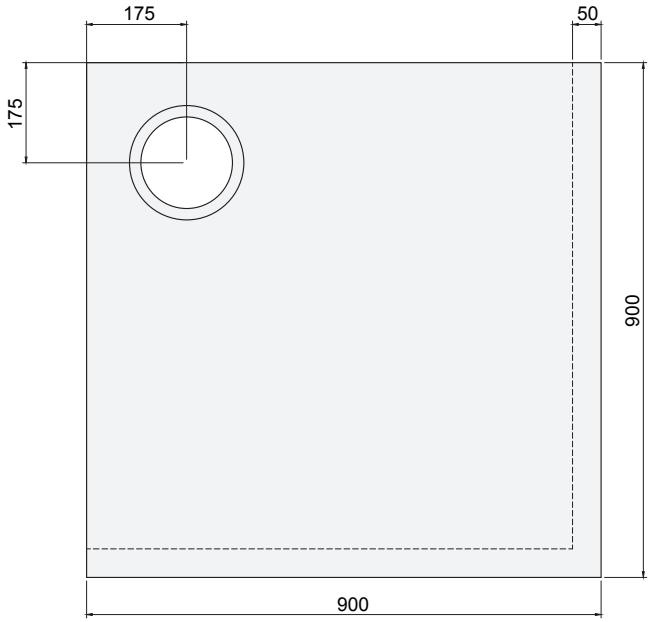

WD5

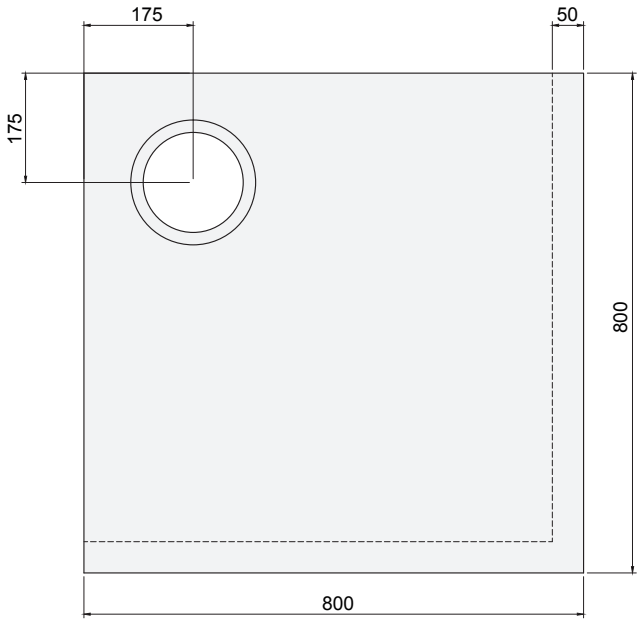

WE'RE HERE TO HELP
☎ 0844 327 6002

WD6

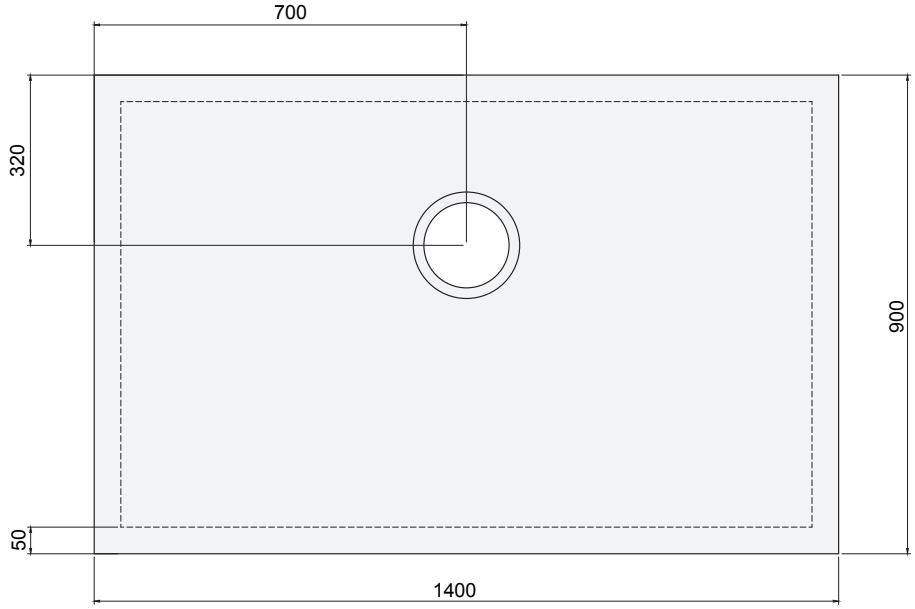

WD7

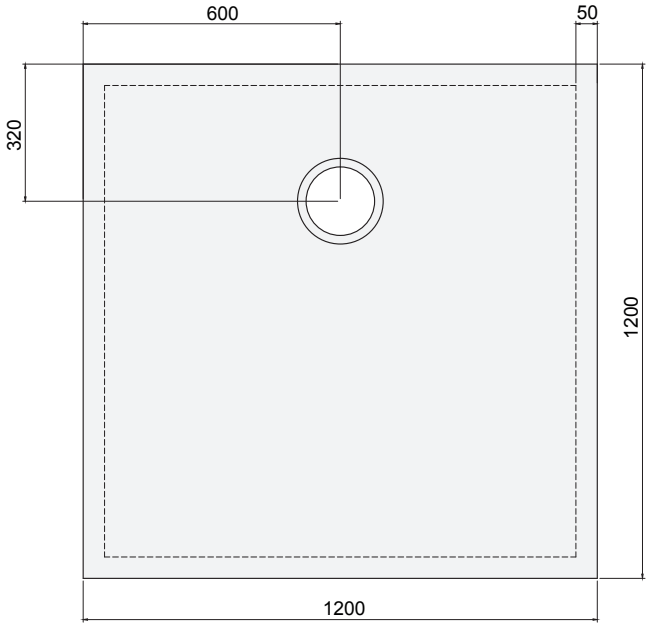

WD8

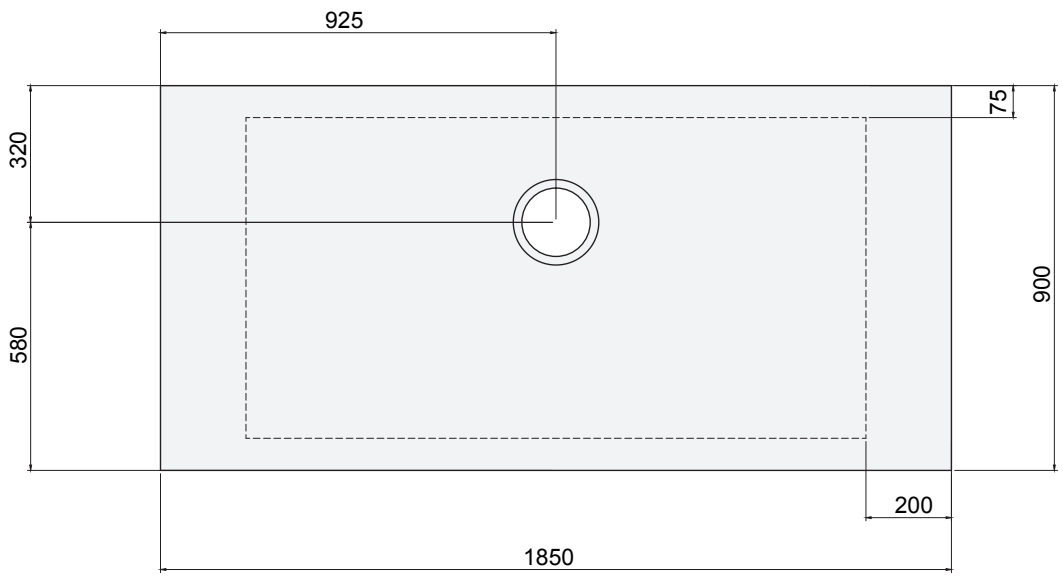

WD9

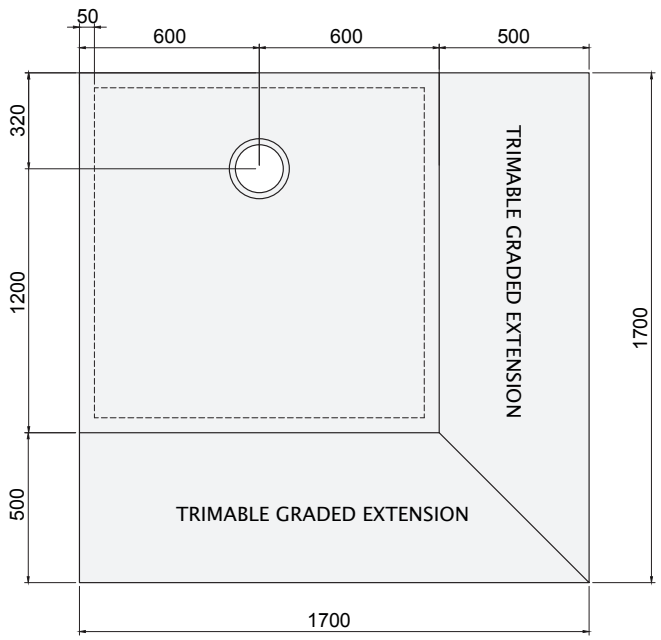

WE'RE HERE TO HELP
☎ 0844 327 6002

3.2 WET-DEC

TECHNICAL SUPPORT

For technical assistance please contact our experienced technical department who will be happy to assist in the following;

- Project design
- Product specification
- CAD drawings
- Method statements

TECHNICAL SEMINARS

We are able to provide CPD based seminars designed to provide guidance on key wetroom design considerations such as;

- Design and layout
- Drainage
- Waterproofing
- Flow rates

For further information please contact our technical department.

TECHNICAL ADVICE

Our team of technical advisors are able to visit you to provide a professional advisory service and assist with project design and specification.

We are also able to attend site to provide technical support and assistance.

TECHNICAL ENQUIRIES
TEL: 0844 327 6002

Fax: 01256 765100
technical@ccl-wetrooms.co.uk
www.ccl-wetrooms.co.uk

CCL Specialist Supplies Ltd
Highview Business Park
The Barracks, Hook,
Hampshire, RG27 9NL

CCL WETROOMS

INSTALLATION

With over 30 years experience in the waterproofing industry, our involvement in a project from conception to completion ensures that quality is never compromised.

Our services include;

- Design and installation
- 10 Year Insured Installation guarantee
- On-site training

INSTALLATION ENQUIRIES
TEL: 0845 045 6001

Fax: 01256 765100
enquiries@wetroomsuk.co.uk
www.wetroomsuk.co.uk

Wetrooms UK Ltd
Highview Business Park
The Barracks, Hook,
Hampshire, RG27 9NL

British Structural Waterproofing Association · GPI · PCA Property Care Association · Trust Mark

WETROOMS UK