CCL WETROOMS

SECTION 1.1

LINEAR SCREED DRAIN

PRODUCT
SPECIFICATION
GUIDE

1.1 LINEAR SCREED DRAIN

FINISHED PRODUCT

The Linear Screed Drain has been developed specifically for concrete or screeded floors and can be used on concrete slabs, planks and block and beam floors.

The key feature of the Linear Screed Drain is its height - the total height from the base to the top of the trough being only 67mm, making it perfect for today's modern construction methods.

The drain incorporates a unique waterless trap which has a lifetime guarantee and has been granted BBA approval. It is available with one, two or three traps and a choice of stylish grill finishes.

KEY FEATURES

- Overall height 67mm (min) including trap
- BBA approved
- Lifetime Guarantee
- 360° rotatable waste position
- Waterless trap
- Flow rate up to 70 L/min
- Height adjustable grill
- Easy to clean and replace trap
- Bespoke design available

BESPOKE

WATERLESS TRAP

The waterless trap has been specially designed with a spring loaded mechanism which keeps the trap sealed when not in use. This ensures that even when left unused for prolonged periods the trap cannot dry out, making it ideal for situations where the shower is not in everyday use.

The smart design of the linear trough allows the waste position to be rotated through 360° enabling installation in most scenarios with ease.

TRAP

360° ROTATION

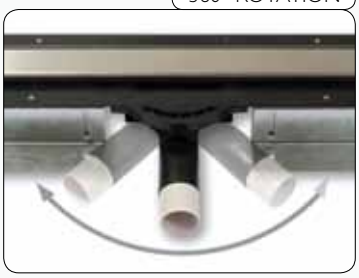

- BBA approved
- 360° rotatable waste position
- Easy to clean and replace trap
- No requirement to top up the trap during long periods of non-use
- No siphoning of the trap due to other appliances
- No chance of smells or gases entering the room

NO. OF TRAPS

A single trapped Linear Screed Drain has a flow rate of up to 29 L/min* with the support brackets on either side.

When a higher flow rate is required a double trap version is available, allowing up 57 L/min*. The traps are positioned near each end of the trough with a single support bracket in the centre.

For higher flow rates, a triple trapped drain is also available with support brackets at either end.

* See flow rate chart for full details

ONE TRAP

TWO TRAPS

THREE TRAPS

FLOW RATES

	No. of wastes		
No. of traps	1	2	3
1	29 L/min	n/a	n/a
2	41 L/min	50 L/min	n/a
3	50 L/min	50 L/min	50 L/min
1	29 L/min	n/a	n/a
2	45 L/min	57 L/min	n/a
3	54 L/min	58 L/min	70 L/min

Stone / Solid-infill

Slotted / Square Holes

WE'RE HERE TO HELP
0844 327 6002

1.1 LINEAR SCREED DRAIN

GRILL LENGTH

All Linear Screed Drains are manufactured with one trough size at 660mm, all lengths of grill are then fitted onto this trough.

Bespoke grills can be manufactured for sizes in between and over those that are standard. Please contact our technical team to discuss your requirements.

The Linear Screed Drain is available in nine standard sizes:

- 600mm
- 800mm
- 900mm
- 1000mm
- 1100mm
- 1200mm
- 1300mm
- 1400mm
- 1500mm

Grill Width: 58mm

9 GRILL LENGTHS

GRILL FINISH

The grill is available in various different finishes.

All are manufactured in 316 marine grade stainless steel, ensuring a stunning high quality finish.

Type A - Solid Grill is supplied as standard unless otherwise specified.

Type A - Solid Grill:
Grained stainless steel with a 3mm gap around the grill for a sleek stylish finish.

TYPE A

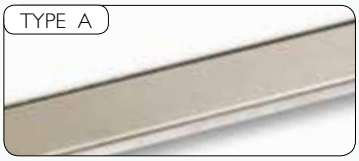

Type B - Oblong Slots:
Three rows of oblong slots in a grained stainless steel finish.

TYPE B

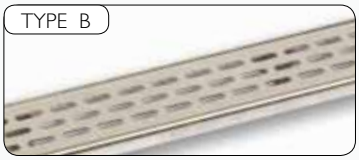

Type C - Square Holes:
Three rows of squares in a grained stainless steel finish.

TYPE C

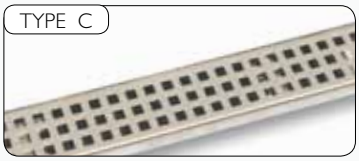

Type S - Stone-infill
Allows a section of tile to be inserted to provide a sleek continuous look. Suitable for 10-12mm stone / porcelain tiles. Bespoke depths available to order.

TYPE S

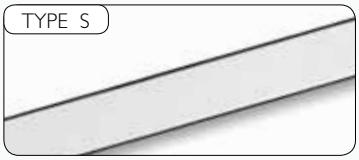

HEIGHT ADJUSTMENT

The grill is height adjustable in 1mm increments to suit tile thicknesses of 6mm to 20mm.

Additional spacers are available upon request for tiles thicker than 20mm.

ADJUSTMENT

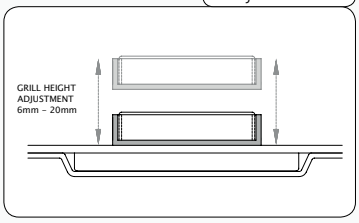

PRODUCT DETAILS

IMAGE	DESCRIPTION	GRILL LENGTH	PRODUCT REF
	Single trap Linear Screed Drain, supplied with solid grill as standard[1] Maximum flow rate 29 L/min	600 mm	LSD 1-600
		800 mm	LSD 1-800
		900 mm	LSD 1-900
		1000 mm	LSD 1-1000
		1100 mm	LSD 1-1100
		1200 mm	LSD 1-1200
		1300 mm	LSD 1-1300
		1400 mm	LSD 1-1400
		1500 mm	LSD 1-1500
	Double trap Linear Screed Drain, supplied with solid grill as standard[1] Maximum flow rate 57 L/min	600 mm	LSD 2-600
		800 mm	LSD 2-800
		900 mm	LSD 2-900
		1000 mm	LSD 2-1000
		1100 mm	LSD 2-1100
		1200 mm	LSD 2-1200
		1300 mm	LSD 2-1300
		1400 mm	LSD 2-1400
		1500 mm	LSD 2-1500
	Triple trap Linear Screed Drain, supplied with solid grill as standard[1] Maximum flow rate 70 L/min	600 mm	LSD 3-600
		800 mm	LSD 3-800
		900 mm	LSD 3-900
		1000 mm	LSD 3-1000
		1100 mm	LSD 3-1100
		1200 mm	LSD 3-1200
		1300 mm	LSD 3-1300
		1400 mm	LSD 3-1400
		1500 mm	LSD 3-1500

[1] Type A – Solid Grill is supplied as standard. For alternative grill finishes please see page 3.

WE'RE HERE TO HELP
☎ 0844 327 6002

1.1 LINEAR SCREED DRAIN

WATERPROOFING

IMAGE	DESCRIPTION	PRODUCT REF
	RIW **Tilesafe** – A superior waterproof membrane designed for use in wetrooms, prior to the application of ceramic tiles and natural stone[2]. • Self-adhesive • Lifetime Guarantee • Quick and easy to install • De-coupling and acoustic properties	TSK-5 (5m² kit) TSK-10 (10m² kit)
	RIW **Screedsafe** – A waterproof membrane designed for use in wetrooms, prior to the application of ceramic tiles and natural stone[2]. • Self-adhesive • Quick and easy to install	SSK-5 (5m² kit) SSK-10 (10m² kit)
	RIW **FWM** – A liquid membrane designed for waterproofing walls, fully compatible with Tilesafe and Screedsafe[2].	FWM-8 (8kg)

[2] For full technical details please refer to section 4.

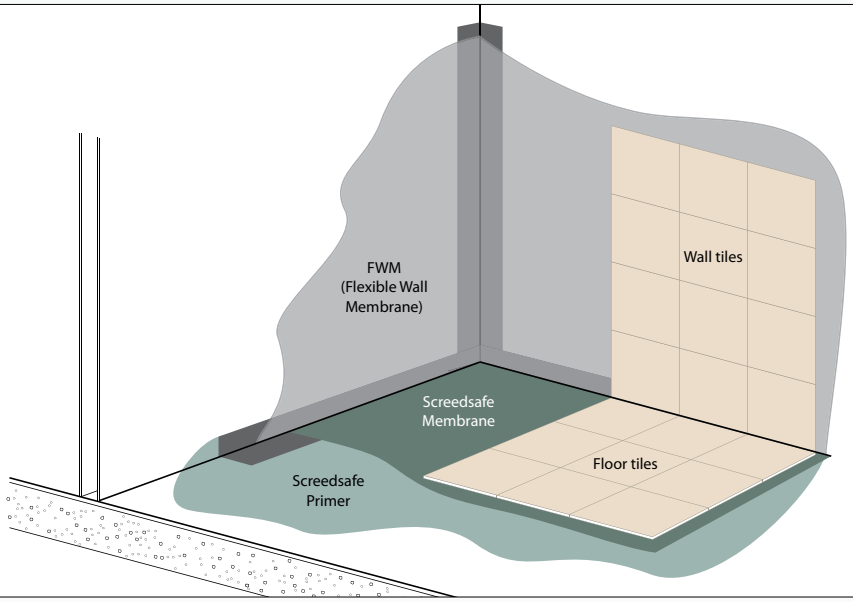

HOW TO SPECIFY

To specify your Linear Screed Drain, first select the required number of traps (depending on the required flow rate), followed by the grill length and finally the grill finish.

Membrane
It is essential that the floor is waterproofed or 'tanked' using one of the RIW membranes in the Product Details section on page 4.

For solid floors we recommend the Tilesafe/ Screedsafe membrane is applied to the shower area plus an additional one metre in either direction.

FWM should then be applied to the walls of the shower and overlapped onto the Tilesafe/Screedsafe Reinforcing Tape.

Example: A single trap, 800mm Linear Screed Drain with square holes would be code:
LSD1-800/Type C

Example: A double trap, 1000mm Linear Screed Drain with a Stone-infill Grill would be code:
LSD2-1000/Type S

IN DETAIL

SIDE VIEW

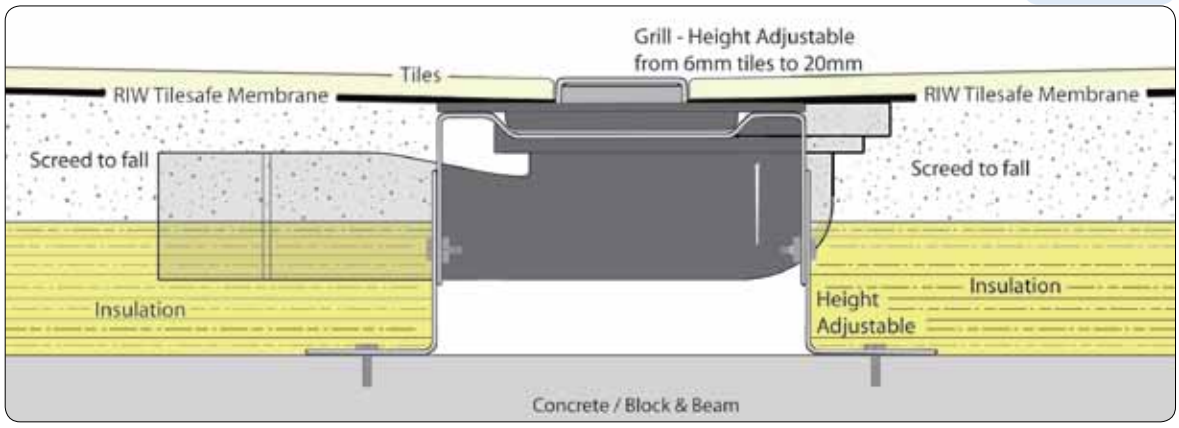

SIDE VIEW

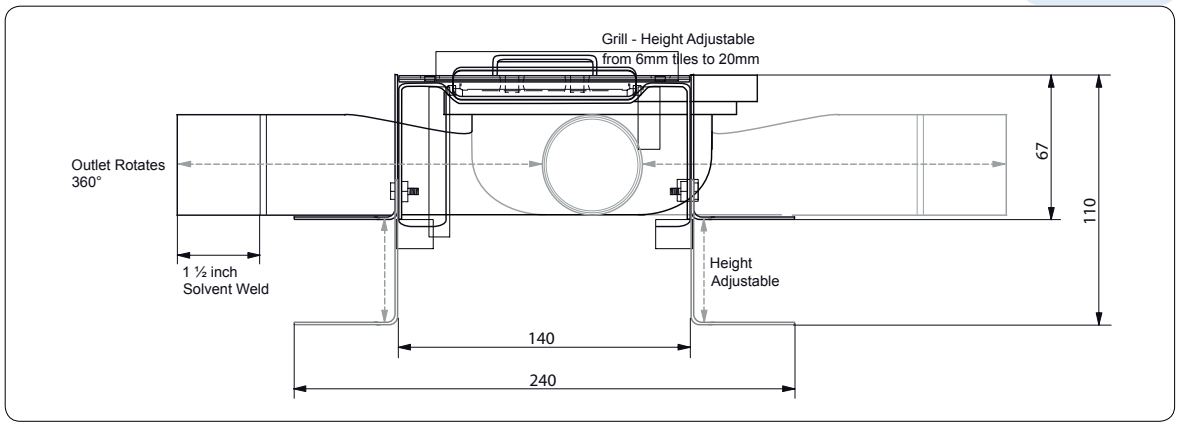

LSD1

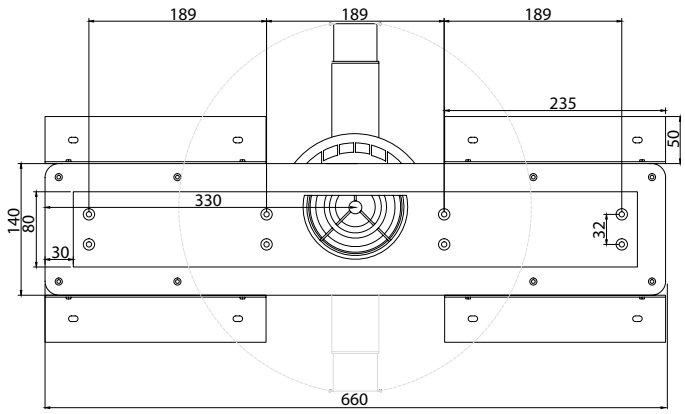

LSD2

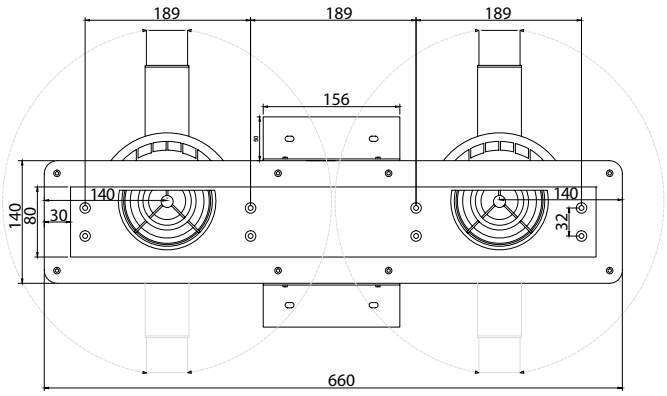

LSD3

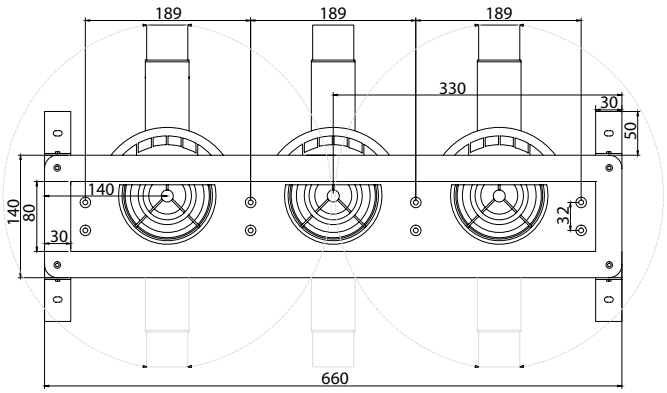

TECHNICAL SUPPORT

For technical assistance please contact our experienced technical department who will be happy to assist in the following;

- Project design
- Product specification
- CAD drawings
- Method statements

TECHNICAL SEMINARS

We are able to provide CPD based seminars designed to provide guidance on key wetroom design considerations such as;

- Design and layout
- Drainage
- Waterproofing
- Flow rates

For further information please contact our technical department.

TECHNICAL ADVICE

Our team of technical advisors are able to visit you to provide a professional advisory service and assist with project design and specification.

We are also able to attend site to provide technical support and assistance.

TECHNICAL ENQUIRIES
TEL: 0844 327 6002

Fax: 01256 765100
technical@ccl-wetrooms.co.uk
www.ccl-wetrooms.co.uk

CCL Specialist Supplies Ltd
Lodge Farm
Hook Road
North Warnborough
Hook
RG29 1HA

CCL WETROOMS

INSTALLATION

With over 30 years experience in the waterproofing industry, our involvement in a project from conception to completion ensures that quality is never compromised.

Our services include;

- Design and installation
- 10 Year Insured Installation guarantee
- On-site training

British Structural Waterproofing Association

part of the CCL group

INSTALLATION ENQUIRIES
TEL: 0845 045 6001

Fax: 01256 765100
enquiries@wetroomsuk.co.uk
www.wetroomsuk.co.uk

Wetrooms UK Ltd
Lodge Farm, Hook Road
North Warnborough
Hook
RG29 1HA

WETROOMS UK

PEACE OF MIND GUARANTEED